THERMA-TRU® DOORS

Fiber-Classic® & Smooth-Star®

L. F. SCHMIDT LICENSE No. 43409 STATE OF FLORIDA PROFESSIONAL ENGINEER

Digitally signed by Lyndon F Schmidt
Date: 2023.07.24 17:21:52 -04'00'

This item has been digitally signed and sealed by **L. F. Schmidt, P.E.** on the date adjacent to the seal.

Printed copies of this document are not considered signed and sealed and the signature must be verified on any electronic copies.

THIS PRODUCT APPROVAL IS VALID ONLY FOR THE STATE OF FLORIDA

WOOD OR COMPOSITE EDGE OPAQUE FIBERGLASS SINGLE DOOR w/ DIRECT SET SIDELITE(S)

INSWING "NON-IMPACT"

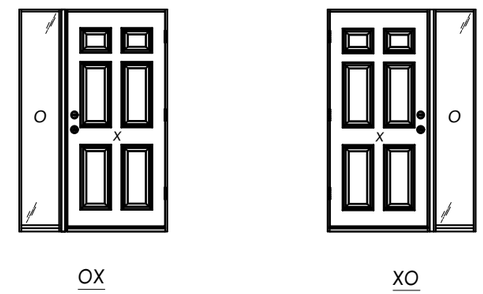

OX XO

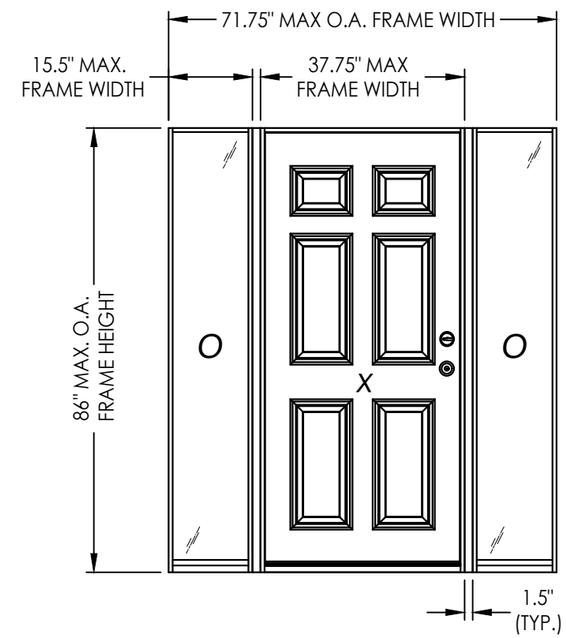

GENERAL NOTES

1. This product has been evaluated and is in compliance with the 8th Edition (2023) Florida Building Code (FBC) structural requirements excluding the "High Velocity Hurricane Zone" (HVHZ).
2. Product anchors shall be as listed and spaced as shown on details. Anchor embedment to base material shall be beyond wall dressing or stucco.
3. When used in areas requiring wind borne debris protection, this product is required to be protected with an impact resistant covering that complies with FBC Sections 1609.1.2 & R301.2.1.2 as follows: Wind Zones 1, 2 & 3: Glazed Sidelites only; Wind Zone 4: Entire System.
4. For 2x stud framing construction, anchoring of these units shall be the same as that shown for 2x buck masonry construction.
5. Site conditions that deviate from the details of this drawing require further engineering analysis by a licensed engineer or registered architect.
6. Fiber-Classic & Smooth-Star Door and Sidelite panels require the use of "J" part numbers and must be stained or painted within six months of installation.

TABLE OF CONTENTS

SHEET #	DESCRIPTION	SHEET#	
1	Typical Elevations, Design Pressures & General Notes	7	Vertical Cross Sections (Thresholds)
2	Door Panel Details	8	Buck Anchoring
3	Sidelite Panel Details	9	Frame Anchoring
4	Elevations	10	Hardware Details
5	Horizontal & Vertical Cross Sections (2X Buck)	11	Bill of Materials & Components
6	Horizontal & Vertical Cross Sections (1X Buck)		

CONFIGURATION	2X REINFORCEMENT REQUIRED	DESIGN PRESSURE (PSF) w/ FJ PINE JAMBS		DESIGN PRESSURE (PSF) w/ COMPOSITE JAMBS	
		POSITIVE	NEGATIVE	POSITIVE	NEGATIVE
XO, OX, OXO	NO	+55.0	-60.0	+35.0	-45.0
	YES	+70.0	-75.0	+60.0	-65.0

Documents Prepared By:
Lyndon F. Schmidt
P.E. No. 43409
RW BUILDING CONSULTANTS, INC.
P.O. Box 230, Valrico, FL 33595
Phone No.: 813.659.9197
FBPE Registry License No. 9813

PRODUCT: THERMA-TRU FIBERGLASS DOOR

PART OR ASSEMBLY: TYPICAL ELEVATION, DESIGN PRESSURES & GENERAL NOTES

NO.	DATE	REVISIONS	BY
1	7/24/23	UPDATE TO 8TH ED. (2023) FBC	LFS

DATE: 12/10/20
SCALE: N.T.S.
DWG. BY: RW
CHK. BY: LFS
DRAWING NO.: FL-35436.5
SHEET 1 OF 11

© 2020 R.W. Building Consultants Inc.

Z:\2023 FBC Drawings\Therma-Tru\FL-35436 R2\FL-35436.5,7.dwg

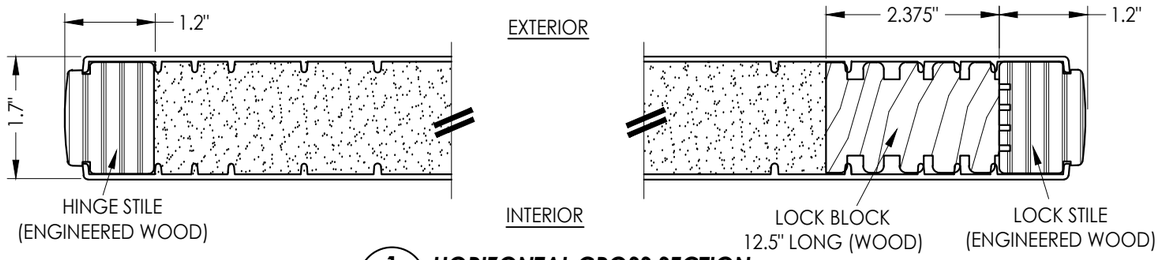

1/2 HORIZONTAL CROSS SECTION
WOOD EDGE

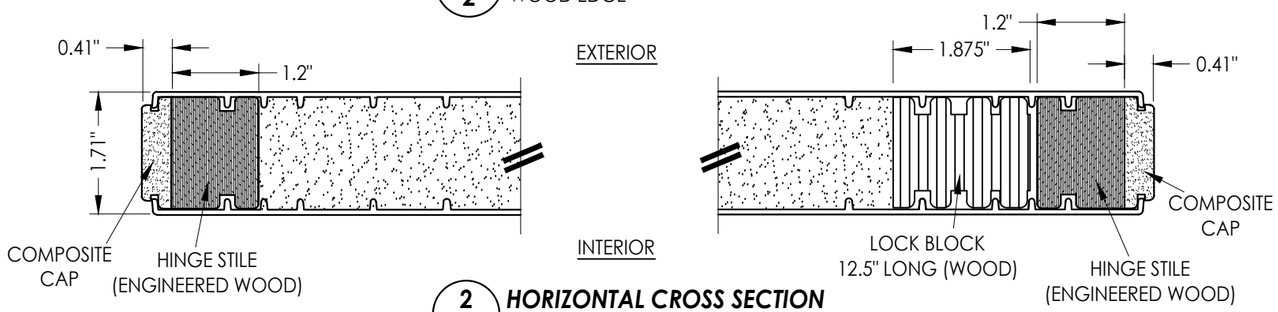

2/2 HORIZONTAL CROSS SECTION
COMPOSITE EDGE

NOTE: BOOK, HYBRID & U1 DOORS MAY EACH BE FABRICATED AS WOOD OR COMPOSITE EDGE DOORS.

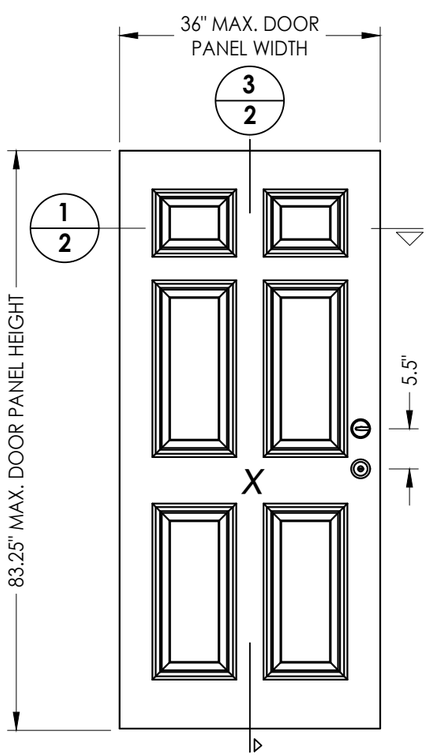

40 DOOR PANEL
BOOK

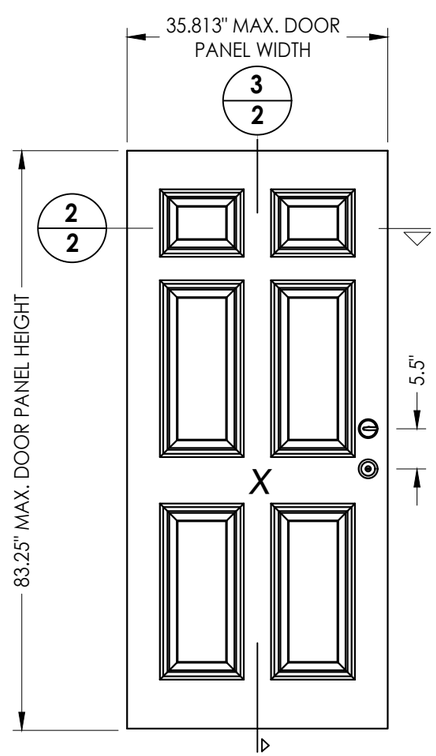

41 DOOR PANEL
Hybrid Door

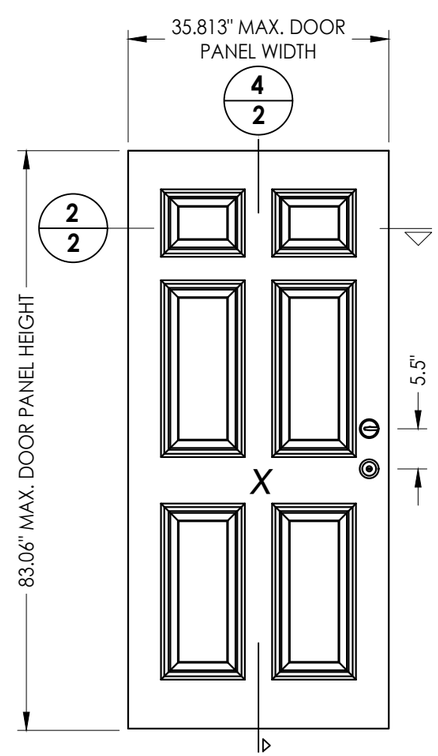

42 DOOR PANEL
U1 Door

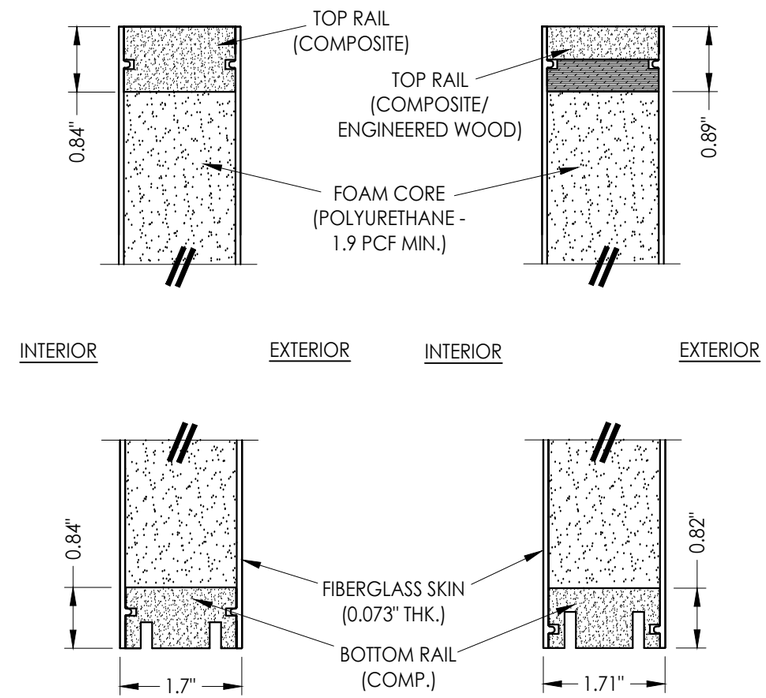

3/2 VERTICAL CROSS SECTION
WOOD EDGE

4/2 VERTICAL CROSS SECTION
COMPOSITE EDGE

Documents Prepared By:
Lyndon F. Schmidt
P.E. No. 43409

RW BUILDING CONSULTANTS, INC.
P.O. Box 230, Valrico, FL 33595
Phone No.: 813.659.9197
FBPE Registry License No. 9813

PRODUCT: THERMA-TRU FIBERGLASS DOOR

PART OR ASSEMBLY: DOOR PANEL DETAILS

NO.	DATE	REVISIONS	BY
1	7/24/23	UPDATE TO 8TH ED. (2023) FBC	LFS

DATE: 12/10/20
SCALE: N.T.S.
DWG. BY: RW
CHK. BY: LFS
DRAWING NO.: FL-35436.5
SHEET 2 OF 11

© 2020 R.W. Building Consultants Inc.

Z:\2023 FBC Drawings\Therma-Tru\FL-35436 R2\FL-35436.5.7.dwg

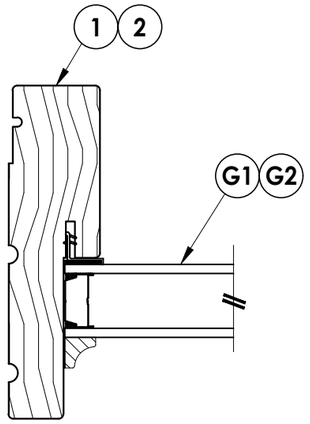

1/3 **HORIZONTAL CROSS SECTION**

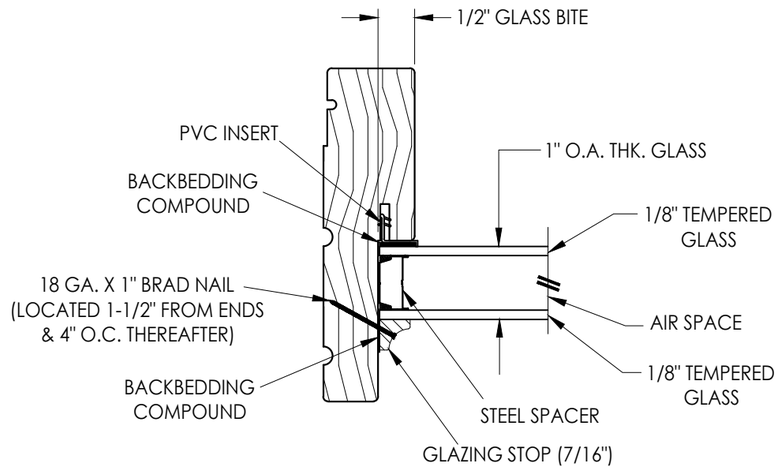

G1 **GLAZING DETAIL**
1" Insulated Glass

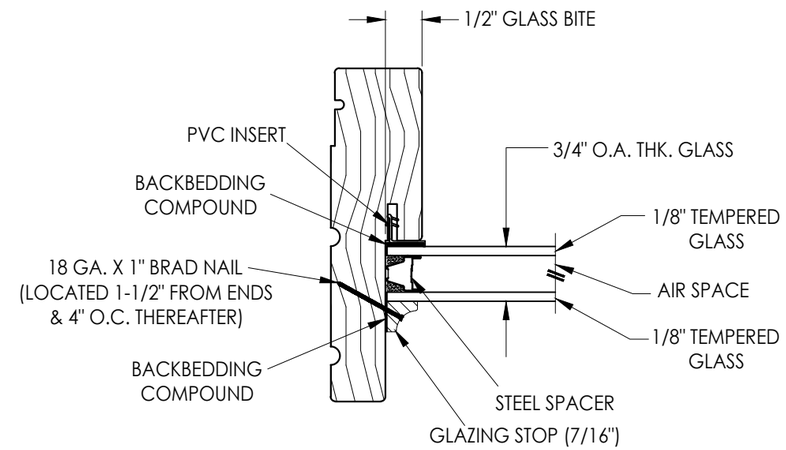

G2 **GLAZING DETAIL**
3/4" Insulated Glass

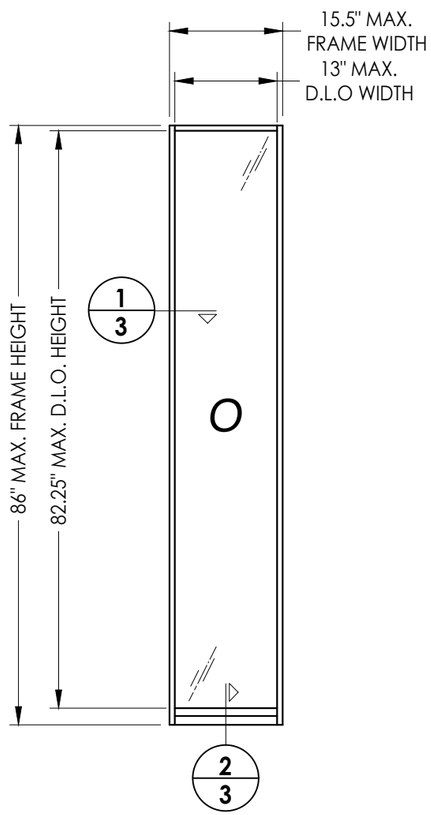

50 **DIRECT SET SIDELITE FRAME**

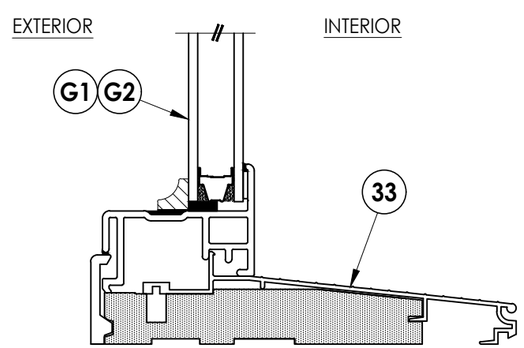

2/3 **VERTICAL CROSS SECTION**

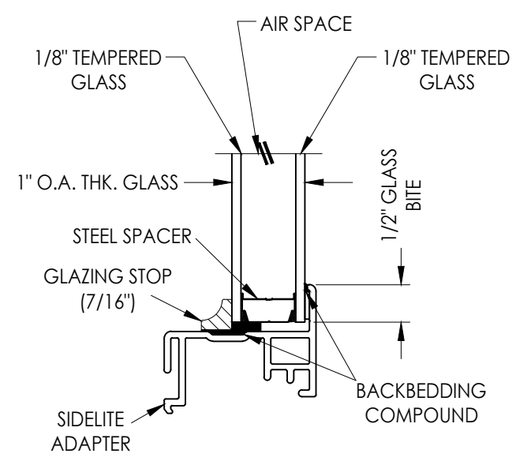

G1 **GLAZING DETAIL**
1" Insulated Glass

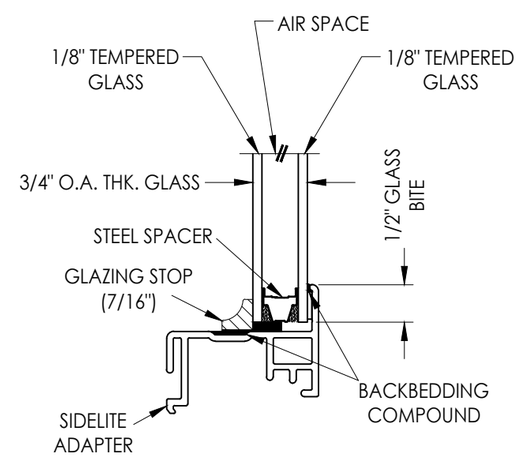

G2 **GLAZING DETAIL**
3/4" Insulated Glass

Documents Prepared By:
Lyndon F. Schmidt
P.E. No. 43409
RW BUILDING CONSULTANTS, INC.
P.O. Box 230, Valrico, FL 33595
Phone No.: 813.659.9197
FBPE Registry License No. 9813

PRODUCT: THERMA-TRU FIBERGLASS DOOR

PART OR ASSEMBLY: SIDELITE PANEL DETAILS

REVISIONS

NO.	DATE		BY
1	7/24/23	UPDATE TO 8TH ED. (2023) FBC	LFS

DATE: 12/10/20
SCALE: N.T.S.
DWG. BY: RW
CHK. BY: LFS
DRAWING NO.: FL-35436.5
SHEET 3 OF 11

© 2020 R.W. Building Consultants Inc.

Z:\2023 FBC Drawings\Therma-Tru\FL-35436 R2\FL-35436.5,7.dwg

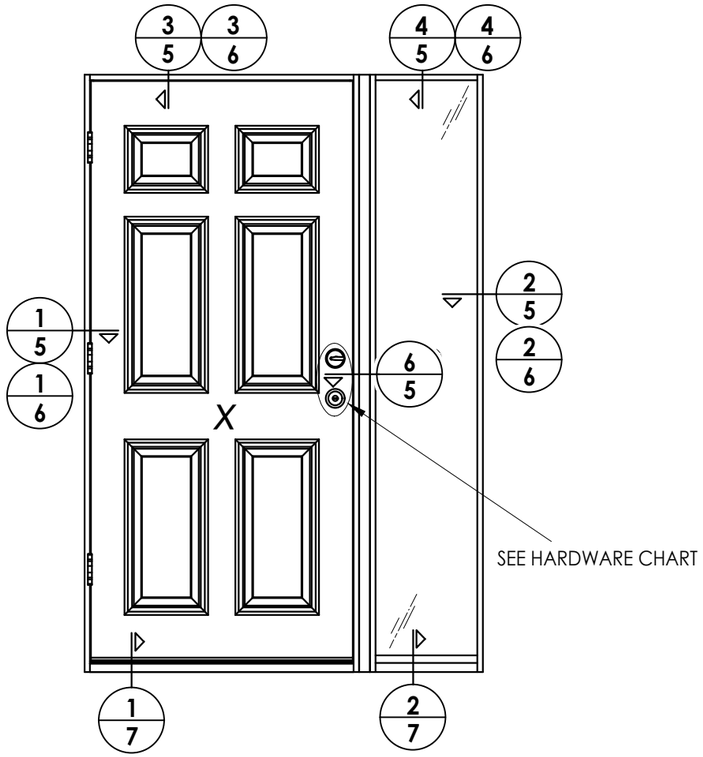

ELEVATION
XO

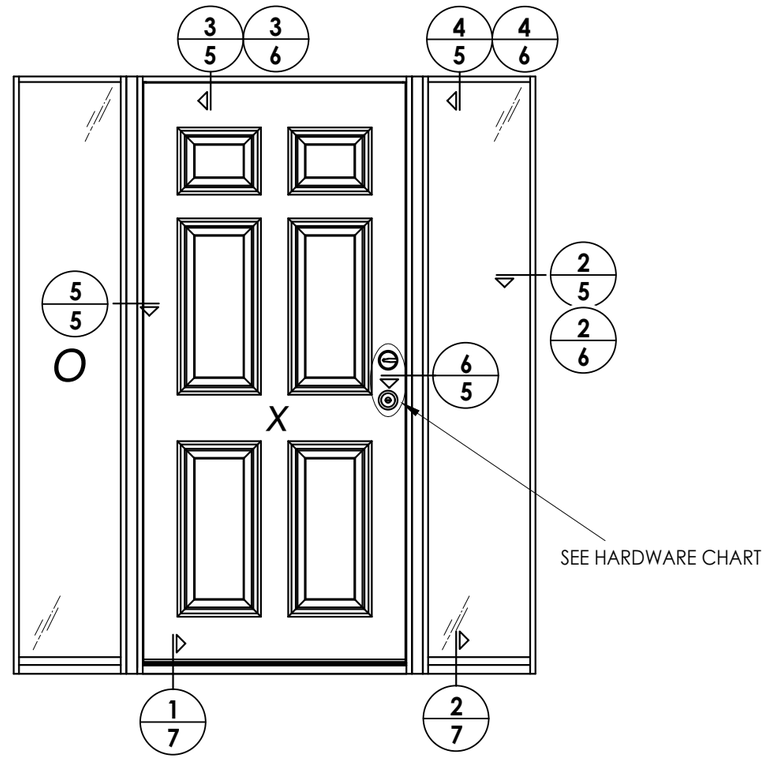

ELEVATION
OXO

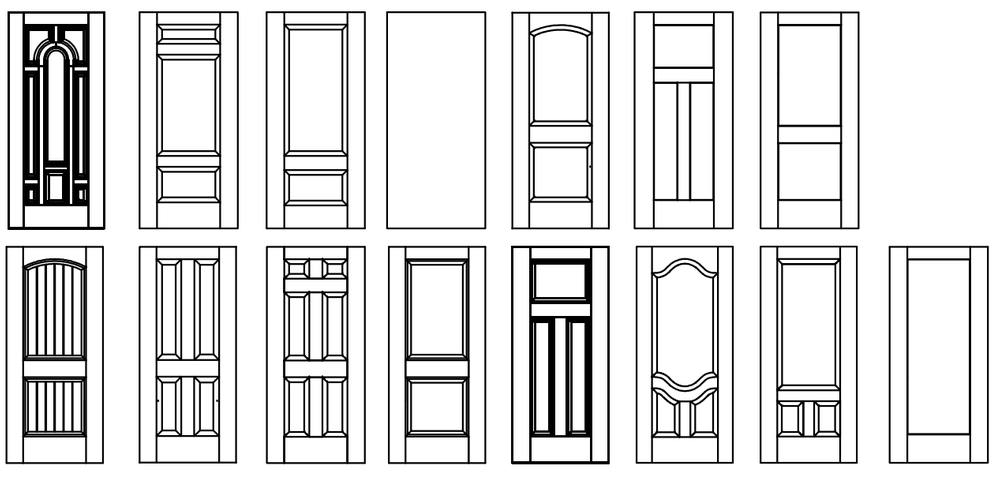

Fiber-Classic/Smooth-Star Door Panel Options

Products approved include all embossed and recessed panel doors.
Similar opaque panel configurations are allowed.
Panels shown are for illustration and are representative only.

HARDWARE TABLE		
MANUFACTURER	**MODEL**	
SCHLAGE	**KNOB:** **DEADBOLT:**	**F51** **B60**
KWIKSET	**KNOB:** **DEADBOLT:**	**SIGNATURE SERIES** **SIGNATURE SERIES (980)**

Documents Prepared By:
Lyndon F. Schmidt
P.E. No. 43409

RW BUILDING CONSULTANTS, INC.
P.O. Box 230, Valrico, FL 33595
Phone No.: 813.659.9197
FBPE Registry License No. 9813

PRODUCT: THERMA-TRU FIBERGLASS DOOR

PART OR ASSEMBLY: ELEVATIONS

NO.	DATE	REVISIONS	BY
1	7/24/23	UPDATE TO 8TH ED. (2023) FBC	LFS

DATE: 12/10/20
SCALE: N.T.S.
DWG. BY: RW
CHK. BY: LFS
DRAWING NO.: FL-35436.5
SHEET 4 OF 11

© 2020 R.W. BUILDING CONSULTANTS INC.

Z:\2023 FBC Drawings\Therma-Tru\FL-35436 R2\FL-35436.5,7.dwg

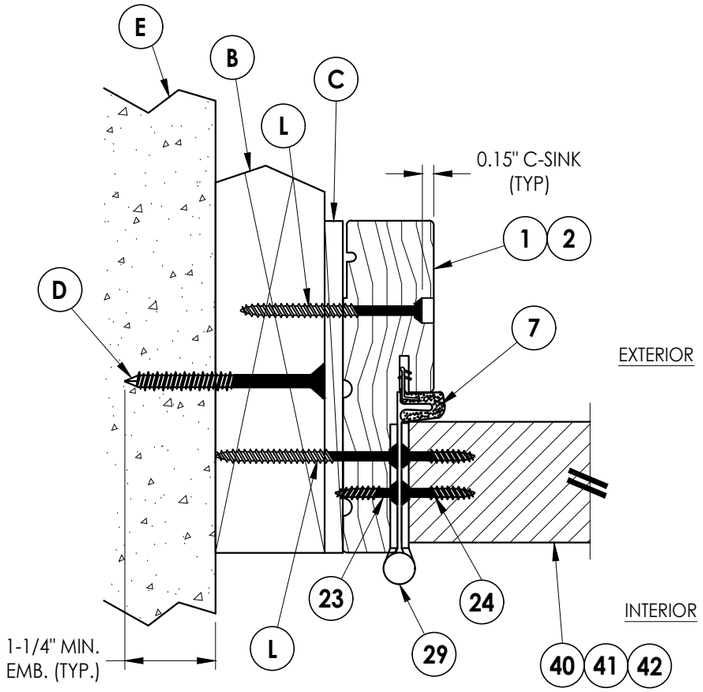

1/5 HORIZONTAL CROSS SECTION
Shown w/ 2X Buck

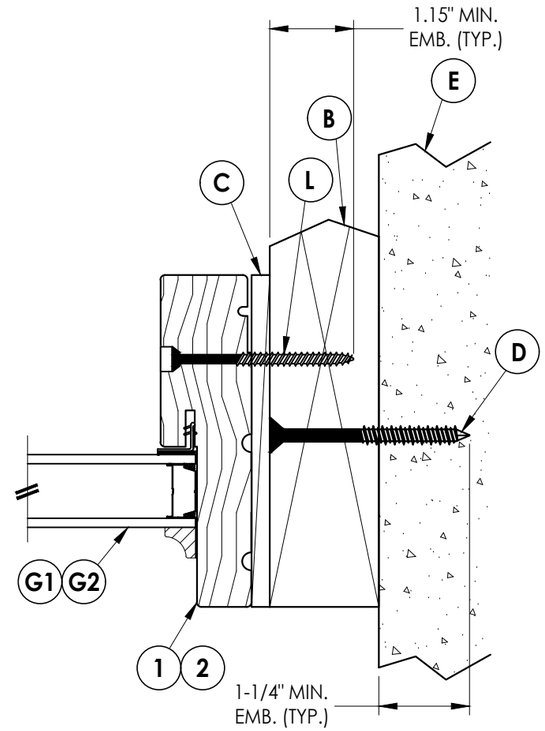

2/5 HORIZONTAL CROSS SECTION
Shown w/ 2X Buck

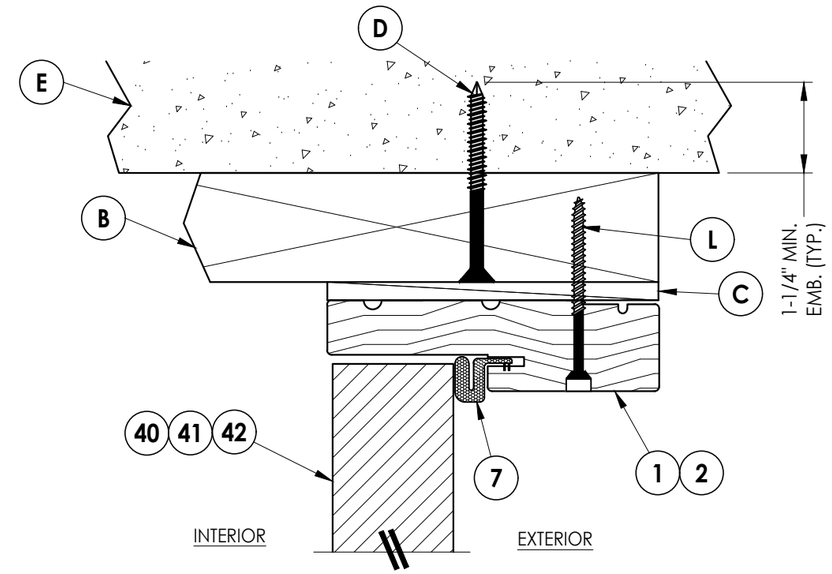

3/5 VERTICAL CROSS SECTION
Shown w/ 2X Buck

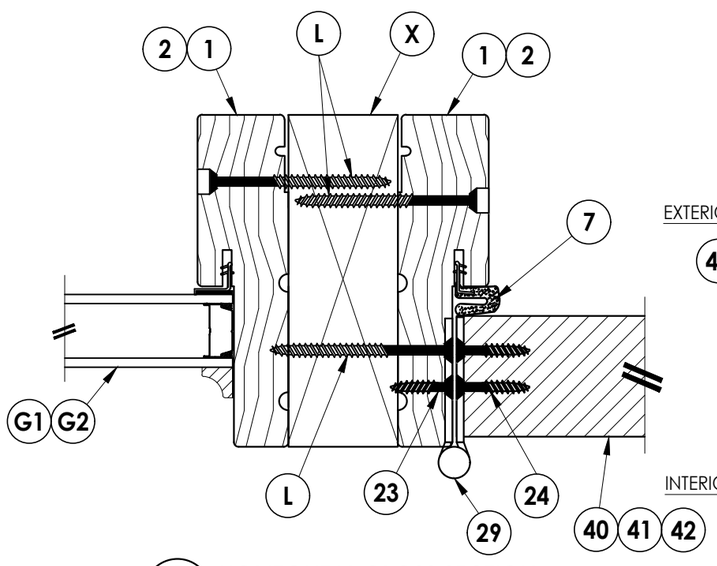

5/5 HORIZONTAL CROSS SECTION
Shown w/ 2X Reinforcement

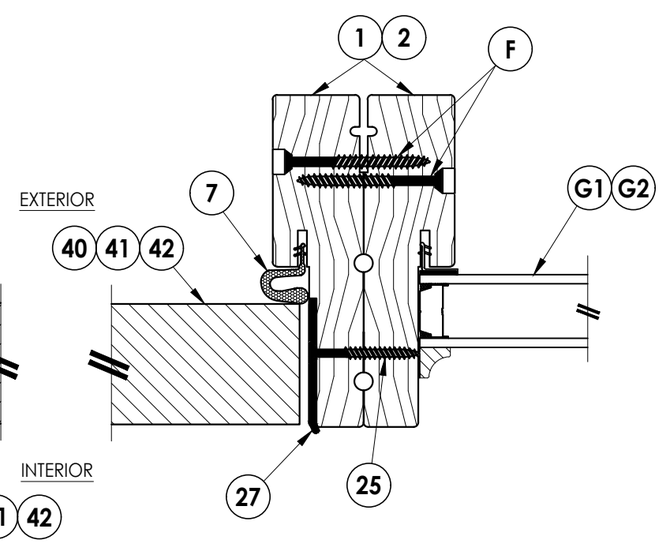

6/5 HORIZONTAL CROSS SECTION
Shown w/ Back-to-Back Jambs

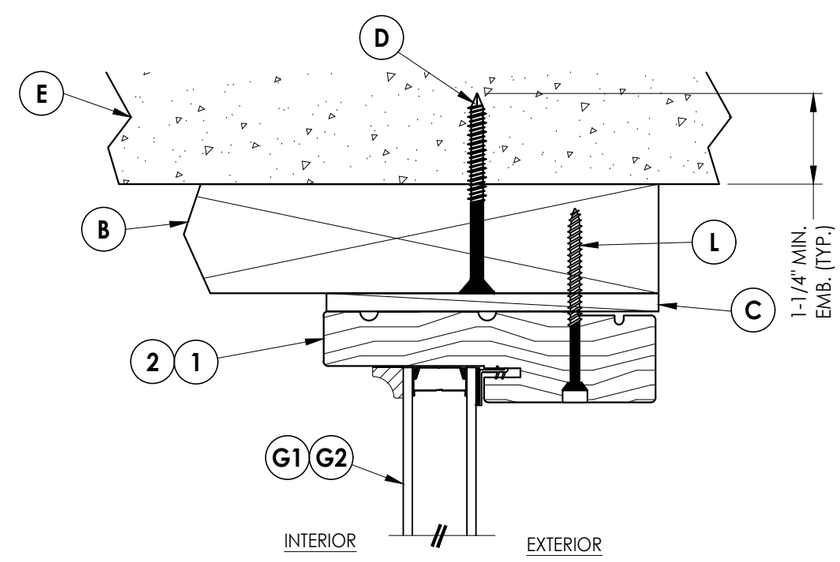

4/5 VERTICAL CROSS SECTION
Shown w/ 2X Buck

Z:\2023 FBC Drawings\Therma-Tru\FL-35436 R2\FL-35436.5,7.dwg

Documents Prepared By:
Lyndon F. Schmidt
P.E. No. 43409

RW BUILDING CONSULTANTS, INC.
P.O. Box 230, Valrico, FL 33595
Phone No.: 813.659.9197
FBPE Registry License No. 9813

PRODUCT: THERMA-TRU FIBERGLASS DOOR

PART OR ASSEMBLY: HORIZONTAL & VERTICAL CROSS SECTIONS (2X BUCK)

REVISIONS

NO.	DATE		BY
1	7/24/23	UPDATE TO 8TH ED. (2023) FBC	LFS

DATE: 12/10/20
SCALE: N.T.S.
DWG. BY: RW
CHK. BY: LFS
DRAWING NO.: FL-35436.5
SHEET 5 OF 11

© 2020 R.W. Building Consultants Inc.

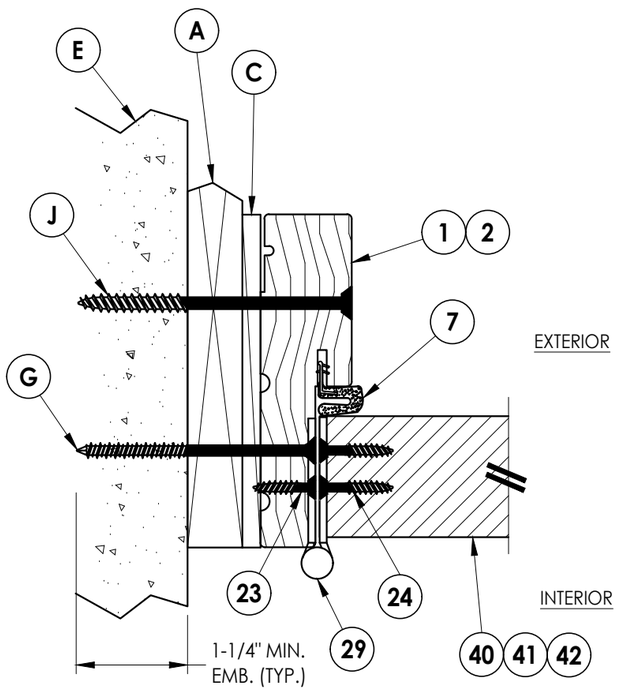

1/6 HORIZONTAL CROSS SECTION
Shown w/ 1X sub-buck

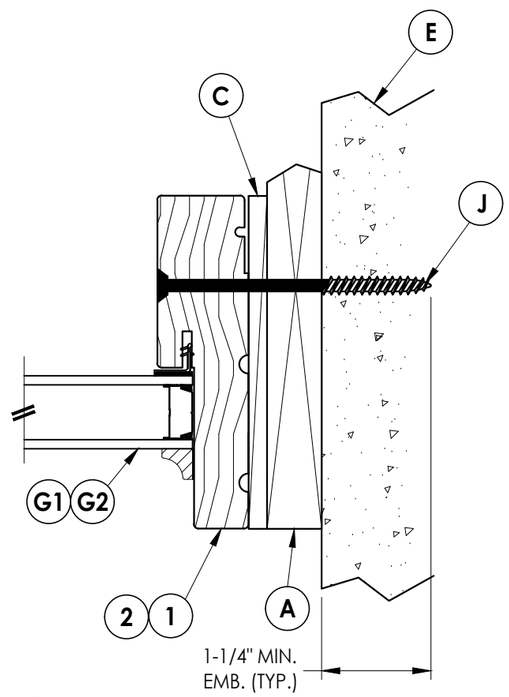

2/6 HORIZONTAL CROSS SECTION
Shown w/ 1X sub-buck

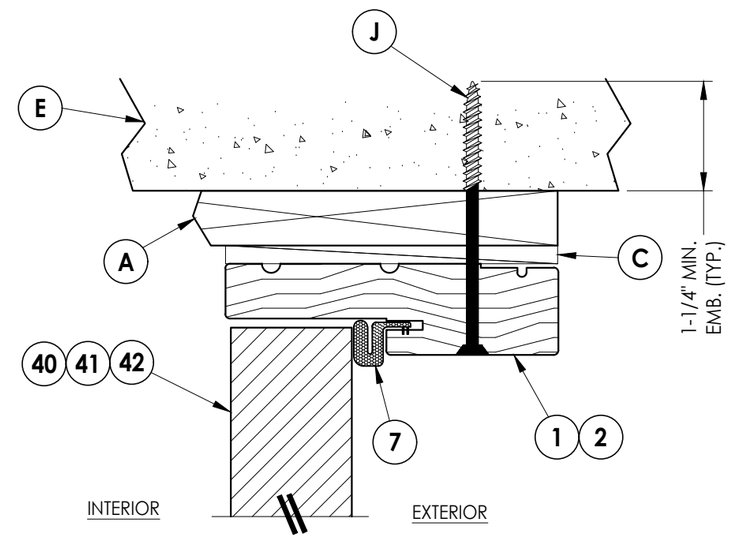

3/6 VERTICAL CROSS SECTION
Shown w/ 1X sub-buck
Outswing shown (Inswing similar)

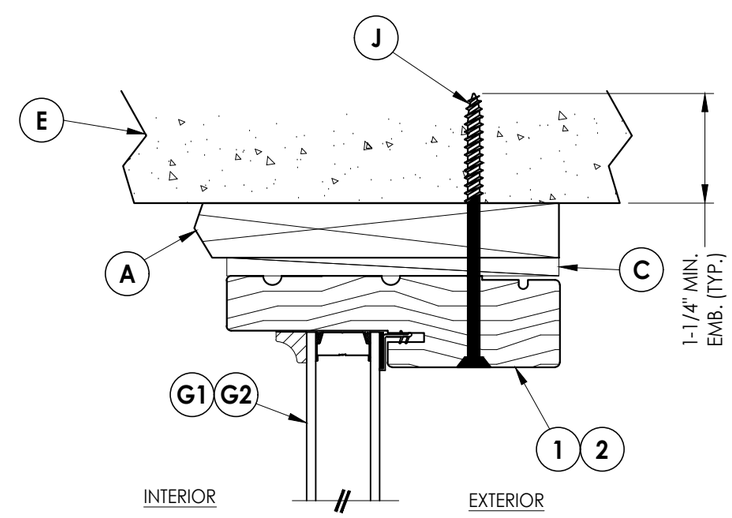

4/6 VERTICAL CROSS SECTION
Shown w/ 1X sub-buck

Documents Prepared By:
Lyndon F. Schmidt
P.E. No. 43409

RW BUILDING CONSULTANTS, INC.
P.O. Box 230, Valrico, FL 33595
Phone No.: 813.659.9197
FBPE Registry License No. 9813

PRODUCT: THERMA-TRU FIBERGLASS DOOR

PART OR ASSEMBLY: HORIZONTAL & VERTICAL CROSS SECTIONS (1X BUCK)

REVISIONS

NO.	DATE		BY
1	7/24/23	UPDATE TO 8TH ED. (2023) FBC	LFS

DATE: 12/10/20
SCALE: N.T.S.
DWG. BY: RW
CHK. BY: LFS
DRAWING NO.: FL-35436.5
SHEET 6 OF 11

© 2020 R.W. Building Consultants Inc.

Z:\2023 FBC Drawings\Therma-Tru\FL-35436 R2\FL-35436.5,7.dwg

Note:
1. Sill Item #'s 32 & 33 are attached to jambs w/ (3) #8 X 2-1/2" pfh screws at each end.

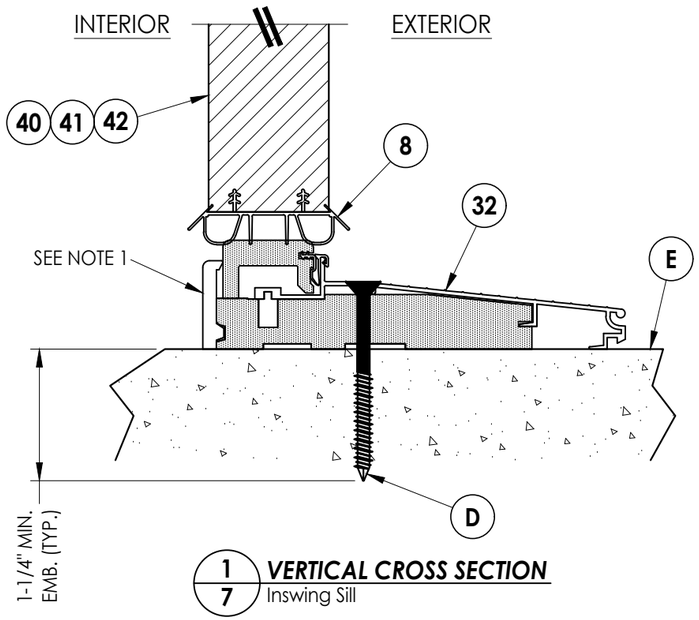

1/7 **VERTICAL CROSS SECTION**
Inswing Sill

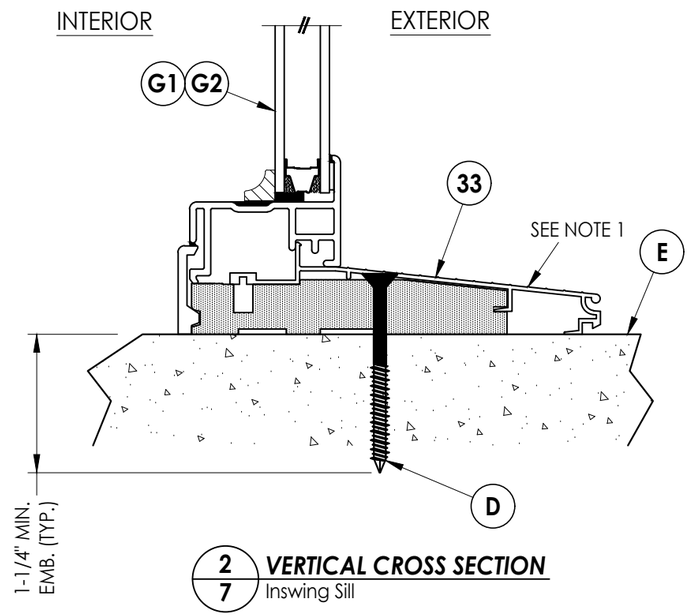

2/7 **VERTICAL CROSS SECTION**
Inswing Sill

Documents Prepared By:
Lyndon F. Schmidt
P.E. No. 43409

RW BUILDING CONSULTANTS, INC.
P.O. Box 230, Valrico, FL 33595
Phone No.: 813.659.9197
FBPE Registry License No. 9813

PRODUCT: THERMA-TRU FIBERGLASS DOOR

PART OR ASSEMBLY: VERTICAL CROSS SECTIONS (THRESHOLDS)

NO.	DATE		BY
1	7/24/23	UPDATE TO 8TH ED. (2023) FBC	LFS

REVISIONS

DATE: 12/10/20
SCALE: N.T.S.
DWG. BY: RW
CHK. BY: LFS
DRAWING NO.: FL-35436.5
SHEET 7 OF 11

© 2020 R.W. BUILDING CONSULTANTS INC.

Z:\2023 FBC Drawings\Therma-Tru\FL-35436 R2\FL-35436.5,7.dwg

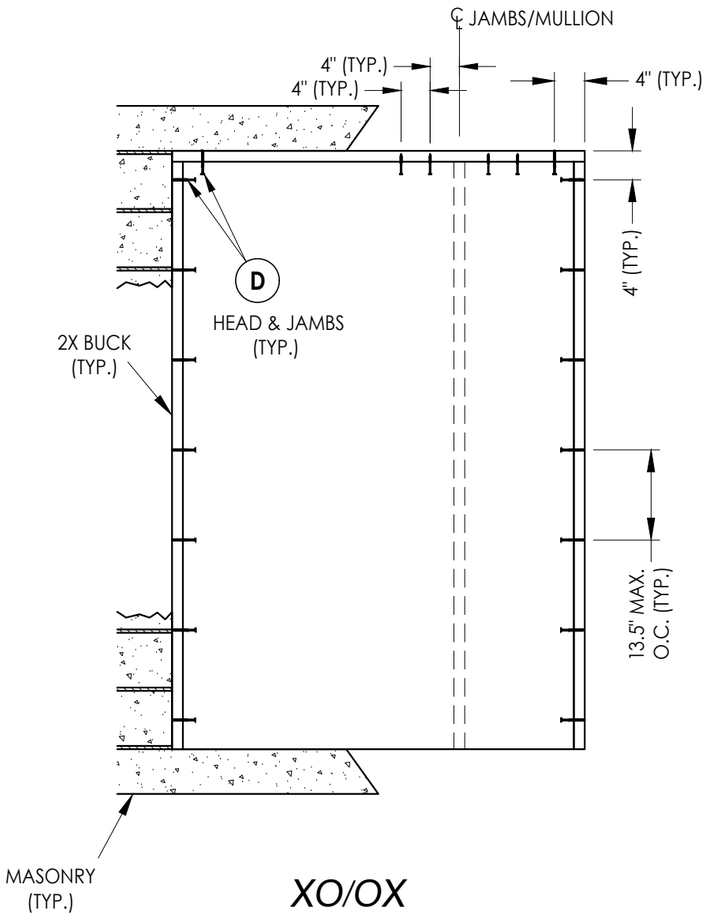

XO/OX

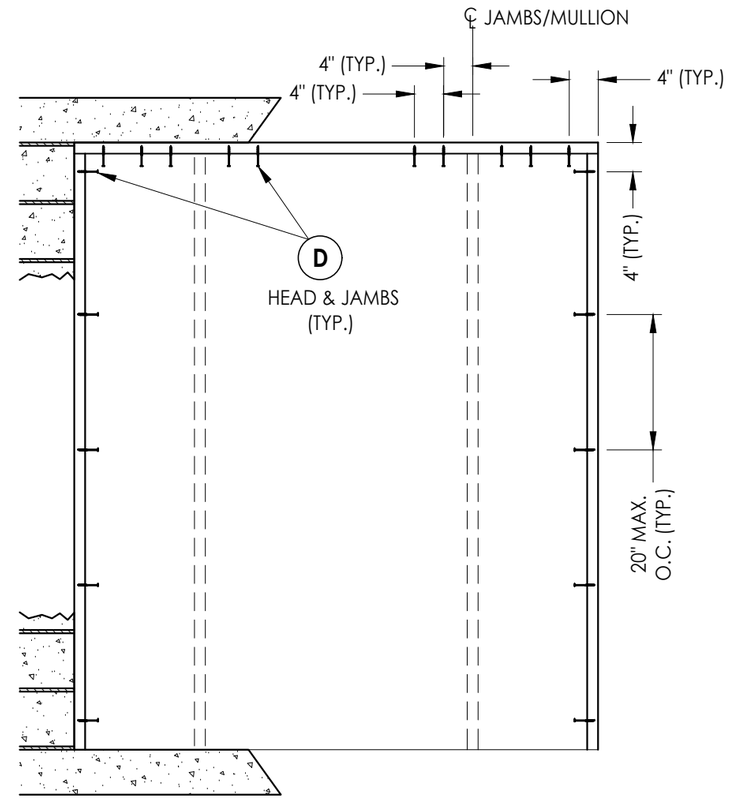

OXO

2X BUCK ANCHORING

Documents Prepared By:
Lyndon F. Schmidt
P.E. No. 43409

RW BUILDING CONSULTANTS, INC.
P.O. Box 230, Valrico, FL 33595
Phone No.: 813.659.9197
FBPE Registry License No. 9813

PRODUCT: THERMA-TRU FIBERGLASS DOOR

PART OR ASSEMBLY: BUCK ANCHORING

NO.	DATE	REVISIONS	BY
1	7/24/23	UPDATE TO 8TH ED. (2023) FBC	LFS

DATE: 12/10/20
SCALE: N.T.S.
DWG. BY: RW
CHK. BY: LFS
DRAWING NO.: FL-35436.5
SHEET 8 OF 11

© 2020 R.W. BUILDING CONSULTANTS INC.

Z:\2023 FBC Drawings\Therma-Tru\FL-35436 R2\FL-35436.5,7.dwg

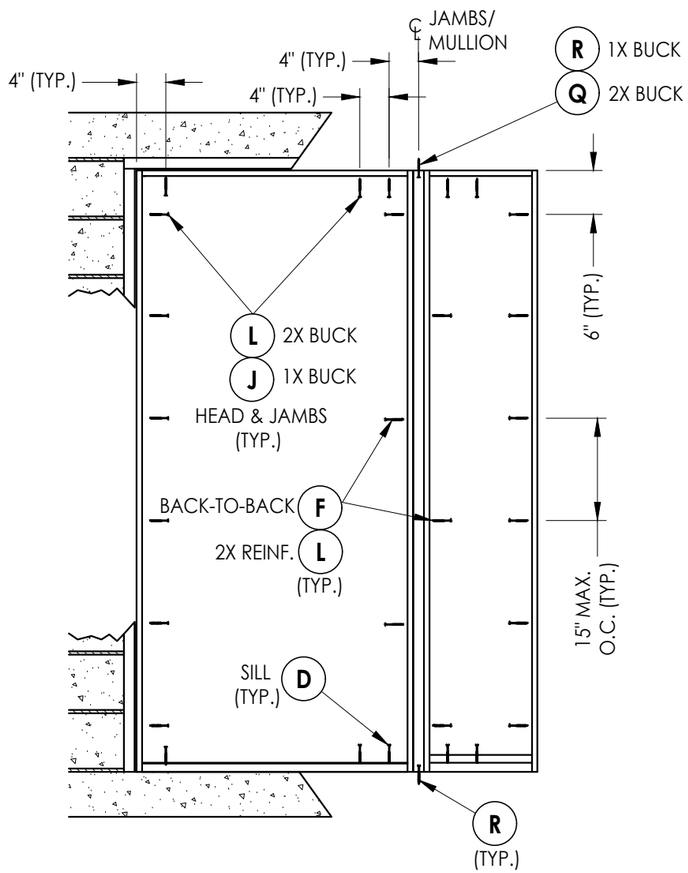

XO/OX

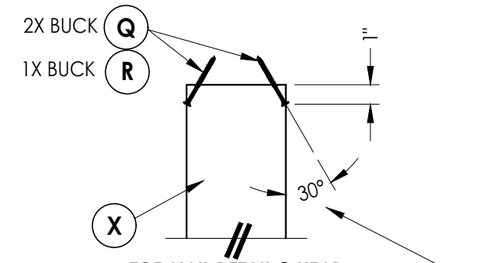

TOE-NAIL DETAIL @ HEAD

TYPICAL @ EACH 2X REINFORCEMENT
NOTE: EXTEND 2X TO CONCRETE FOR 1X BUCK MASONRY INSTALLATIONS

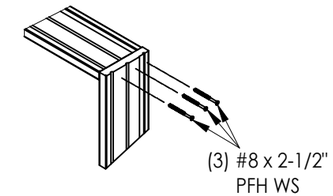

JAMB TO HEAD DETAIL
(TYP.)

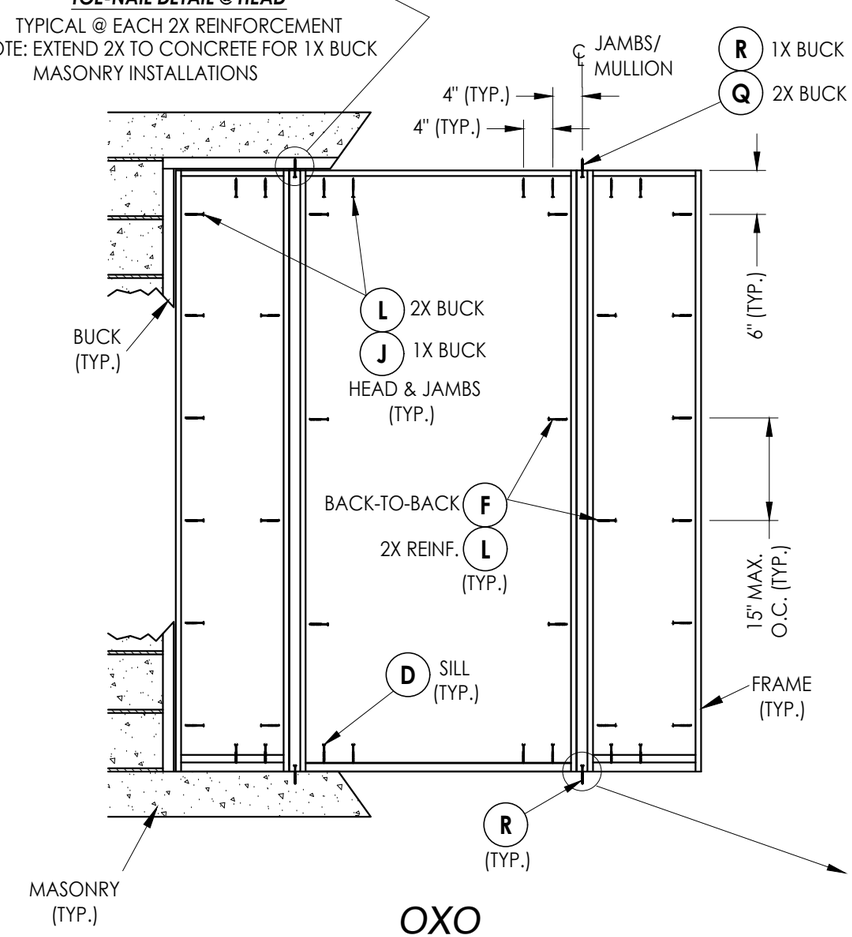

OXO

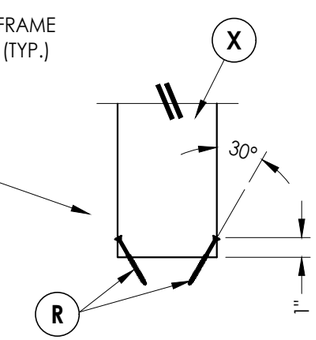

TOE-NAIL DETAIL @ SILL

TYPICAL @ EACH 2X REINFORCEMENT

FRAME ANCHORING

Documents Prepared By:
Lyndon F. Schmidt
P.E. No. 43409

RW BUILDING CONSULTANTS, INC.
P.O. Box 230, Valrico, FL 33595
Phone No.: 813.659.9197
FBPE Registry License No. 9813

PRODUCT: THERMA-TRU FIBERGLASS DOOR

PART OR ASSEMBLY: FRAME ANCHORING

NO.	DATE	REVISIONS	BY
1	7/24/23	UPDATE TO 8TH ED. (2023) FBC	LFS

DATE: 12/10/20
SCALE: N.T.S.
DWG. BY: RW
CHK. BY: LFS
DRAWING NO.: FL-35436.5
SHEET 9 OF 11

© 2020 R.W. Building Consultants Inc.

Z:\2023 FBC Drawings\Therma-Tru\FL-35436 R2\FL-35436.5,7.dwg

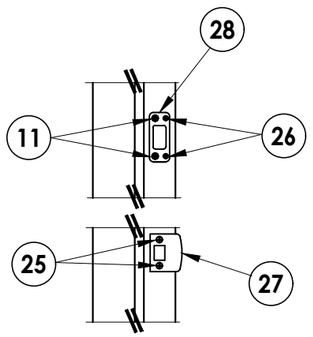

LATCH & DEADBOLT DETAIL
Kwikset

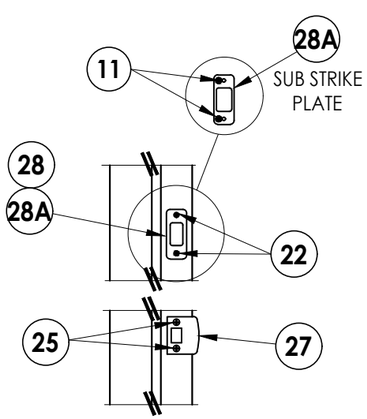

LATCH & DEADBOLT DETAIL
Schlage

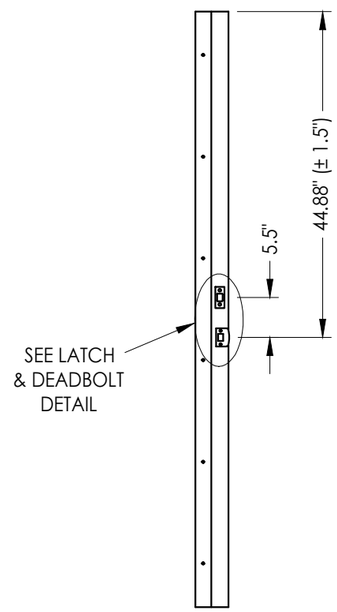

STRIKE JAMB
Latch and Deadbolt

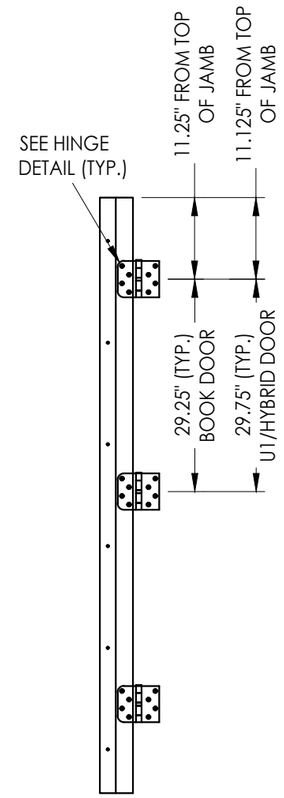

HINGE JAMB

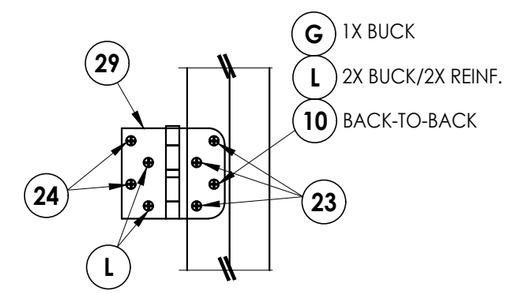

HINGE DETAIL

LATCH & DEADBOLT STRIKE DETAILS

Documents Prepared By:
Lyndon F. Schmidt
P.E. No. 43409

RW BUILDING CONSULTANTS, INC.
P.O. Box 230, Valrico, FL 33595
Phone No.: 813.659.9197
FBPE Registry License No. 9813

PRODUCT: THERMA-TRU FIBERGLASS DOOR

PART OR ASSEMBLY: HARDWARE DETAILS

REVISIONS

NO.	DATE		BY
1	7/24/23	UPDATE TO 8TH ED. (2023) FBC	LFS

DATE: 12/10/20
SCALE: N.T.S.
DWG. BY: RW
CHK. BY: LFS
DRAWING NO.: FL-35436.5
SHEET 10 OF 11

© 2020 R.W. Building Consultants Inc.

Z:\2023 FBC Drawings\Therma-Tru\FL-35436 R2\FL-35436.5,7.dwg

BILL OF MATERIALS

ITEM #	DESCRIPTION	MATERIAL
A	1X BUCK (G >= 0.42)	WOOD
B	2X BUCK (G >= 0.42)	WOOD
C	1/4" MAX. SHIM SPACE	-
D	1/4" X 2-3/4" PFH DeWALT OR ITW CONCRETE SCREW	STEEL
E	MASONRY - 3,000 PSI MIN. CONCRETE CONFORMING TO ACI 301 OR HOLLOW BLOCK CONFORMING TO ASTM C90	CONCRETE
F	#10 X 2" PFH WOOD SCREW	STEEL
G	3/16" x 3-1/4" PFH ITW CONCRETE SCREW	STEEL
I	1/4" X 2-1/4" PFH DeWALT OR ITW CONCRETE SCREW	STEEL
J	1/4" X 3-3/4" PFH DeWALT OR ITW CONCRETE SCREW	STEEL
L	#10 X 2-1/2" PFH WOOD SCREW (1.15" MIN. EMBEDMENT)	STEEL
Q	#10 X 3" PFH WOOD SCREW (1.75" MIN. EMBEDMENT)	STEEL
R	3/16" X 3-1/4" ITW CONCRETE SCREW	STEEL
X	2X REINFORCEMENT (SG = 0.55)	WOOD
1	WOOD JAMB (FINGER JOINT PINE)	WOOD
2	COMPOSITE JAMB	COMP
7	WEATHERSTRIP	FOAM
8	DOOR SWEEP	VINYL
10	#10 X 1-1/2" PFH WOOD SCREW	STEEL
11	#12 X 1-1/2" PFH WOOD SCREW	STEEL
22	#8 X 3/4" PFH WOOD SCREW	STEEL
23	#9 X 3/4" PFH WOOD SCREW	STEEL
24	#9 X 1" PFH WOOD SCREW	STEEL
25	#8 X 1-1/2" PFH WOOD SCREW	STEEL
26	#8 X 5/8" PFH WOOD SCREW	STEEL
27	LATCH STRIKE PLATE	STEEL
28	DEADBOLT STRIKE PLATE	STEEL
28A	DEADBOLT SUB STRIKE PLATE	STEEL
29	4" X 4" HINGE	STEEL
32	INSWING THRESHOLD	ALUM/COMP
33	INSWING THRESHOLD w/ SIDELITE ADAPTER	ALUM/COMP
40	DOOR PANEL (BOOK)	-
41	DOOR PANEL (HYBRID)	-
42	DOOR PANEL (U1)	-

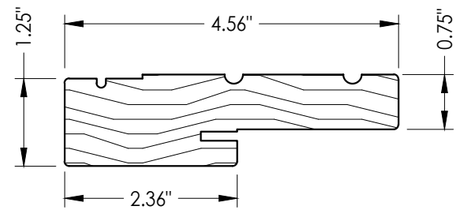

1 **WOOD JAMB**

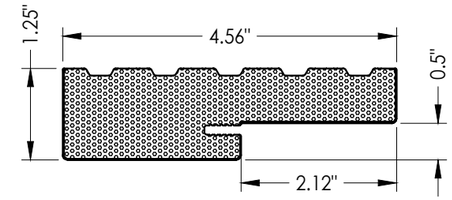

2 **COMPOSITE JAMB**

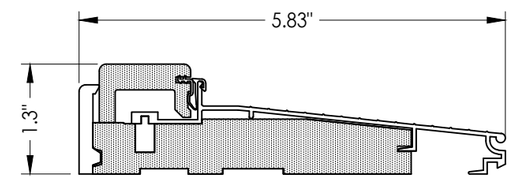

32 **INSWING THRESHOLD**
Adjustable Composite Sill

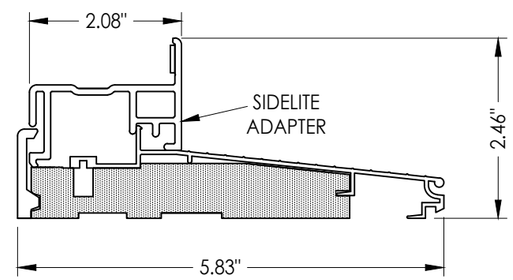

33 **INSWING THRESHOLD w/ SIDELITE ADAPTER**
Composite Sill

CONCRETE ANCHOR NOTES:

1. *Concrete anchor locations at the corners may be adjusted to maintain the min. edge distance to mortar joints.*
2. *Concrete anchor locations noted as "MAX. ON CENTER" must be adjusted to maintain the min. edge distance to mortar joints, additional concrete anchors may be required to ensure the "MAX. ON CENTER" dimension are not exceeded.*
3. *Concrete anchor table:*

ANCHOR TYPE	ANCHOR SIZE	MIN. EMBEDMENT	MIN. CLEARANCE TO MASONRY EDGE	MIN. CLEARANCE TO ADJACENT ANCHOR
ITW TAPCON®	1/4"	1-1/4"	2"	4"
DeWALT ULTRACON+®	1/4"	1-1/4"	1"	4"
ITW TAPCON®	3/16"	1-1/4"	3"	1-1/2"

WOOD SCREW INSTALLATION NOTES:

1. *Maintain a minimum 5/8" edge distance, 1" end distance, & 1" o.c. spacing of wood screws to prevent the splitting of wood.*

Documents Prepared By:
Lyndon F. Schmidt
P.E. No. 43409
RW BUILDING CONSULTANTS, INC.
P.O. Box 230, Valrico, FL 33595
Phone No.: 813.659.9197
FBPE Registry License No. 9813

PRODUCT: THERMA-TRU FIBERGLASS DOOR

PART OR ASSEMBLY: BILL OF MATERIALS & COMPONENTS

REVISIONS

NO.	DATE	BY
1	7/24/23	UPDATE TO 8TH ED. (2023) FBC LFS

DATE: 12/10/20
SCALE: N.T.S.
DWG. BY: RW
CHK. BY: LFS
DRAWING NO.: FL-35436.5
SHEET 11 OF 11

© 2020 R.W. BUILDING CONSULTANTS INC.

Z:\2023 FBC Drawings\Therma-Tru\FL-35436 R2\FL-35436.5,7.dwg